OriginGPS
mini+mighty

SPIDER ANTENNA (ORG12-4T-GNSS) CERAMIC PATCH ANTENNA ELEMENT

Datasheet

OriginGPS.com

INDEX

1. SCOPE 3
2. DISCLAIMER 3
3. SAFETY INFORMATION 3
4. CONTACT INFORMATION 3
5. RELATED DOCUMENTATION 3
6. REVISION HISTORY 3
7. GLOSSARY 4
8. ABOUT SPIDER FAMILY 5
9. ABOUT MICRO SPIDER MODULE 5
10. ABOUT ORIGINGPS 5
11. SPECIFICATIONS 6
11.1. ELECTRICAL CHARACTERISTICS 6
11.2. TYPICAL S_{11} 6
11.3. RADIATION PATTERN 7
12. MECHANICAL SPECIFICATIONS 8
12.1. DIMENSIONS 8
12.2. MATERIALS 8
13. HANDLING INFORMATION 8
13.1. ASSEMBLY 8
13.2. SOLDERING 8
13.3. STORAGE 8
14. COMPLIANCE 9
15. RELIABILITY 9
16. PACKAGING AND DELIVERY 10
16.1. APPEARANCE 10
16.2. MARKING 10
16.3. PACKAGING 11
17. ORDERING INFORMATION 11

TABLE INDEX

TABLE 1 – RELATED DOCUMENTATION 3
TABLE 2 – REVISION HISTORY 3
TABLE 3 – ELECTRICAL SPECIFICATIONS 6
TABLE 4 – MECHANICAL INFORMATION 8
TABLE 5 – MATERIALS 8
TABLE 6 – RELIABILITY DATA 9
TABLE 7 – MARKING 10
TABLE 8 – PACKAGING DIMENSIONS 11
TABLE 9 – ORDERING OPTIONS 11

FIGURE INDEX

FIGURE 1 – RETURN LOSS S_{11} 6
FIGURE 2 – 3D EIRP 7
FIGURE 3 – E2-CUT 7
FIGURE 4 – E1-CUT 7
FIGURE 5 – H-CUT 7
FIGURE 6 – MECHANICAL OUTLINE 8
FIGURE 7 – APPEARANCE TOP 10
FIGURE 8 – APPEARANCE BOTTOM 10
FIGURE 9 – MARKING 10
FIGURE 10 – PACKAGING 11

1. SCOPE

This document describes the features and specifications of Spider ORG12-4T GNSS Antenna.

2. DISCLAIMER

All trademarks are properties of their respective owners.
Performance characteristics listed in this document do not constitute a warranty or guarantee of product performance. OriginGPS assumes no liability or responsibility for any claims or damages arising out of the use of this document, or from the use of integrated circuits based on this document.
OriginGPS assumes no liability or responsibility for unintentional inaccuracies or omissions in this document.
OriginGPS reserves the right to make changes in its products, specifications and other information at any time without notice.
OriginGPS navigation products are not recommended to use in life saving or life sustaining applications.

3. SAFETY INFORMATION

Improper handling and use can cause permanent damage to the product.

4. CONTACT INFORMATION

Support - support@origingps.com or Online Form
Marketing and sales - marketing@origingps.com
Web – www.origingps.com

5. RELATED DOCUMENTATION

№	DOCUMENT NAME	ISSUED BY
1	High Performance Adhesive Transfer Tape 468MP Technical Data	3M

TABLE 1 – RELATED DOCUMENTATION

6. REVISION HISTORY

REVISION	DATE	CHANGE DESCRIPTION
1.0	October 1, 2014	First release

TABLE 2 – REVISION HISTORY

7. GLOSSARY

AEC **A**utomotive **E**lectronics **C**ouncil
AR **A**xial **R**atio
BW **B**and**w**idth
BPF **B**and **P**ass **F**ilter
CE European Community conformity mark
COMPASS PRC GNSS (same as **BDS** **B**ei**D**ou-2 Navigation Satellite **S**ystem)
EGNOS **E**uropean **G**eostationary **N**avigation **O**verlay **S**ervice
EIA **E**lectronic **I**ndustries **A**lliance
EMC **E**lectro-**M**agnetic **C**ompatibility
EMI **E**lectro-**M**agnetic **I**nterference
ENIG **E**lectroless **N**ickel **I**mmersion **G**old
ESD **E**lectro-**S**tatic **D**ischarge
EVB **E**valuation **B**oard
EVK **E**valuation **K**it
f_C Resonant Frequency
FCC **F**ederal **C**ommunications **C**ommission
FR **F**lame **R**etardant fiber
GALILEO EU GNSS
GLONASS **Glo**bal **Na**vigation **S**atellite **S**ystem
GNSS **G**lobal **N**avigation **S**atellite **S**ystem
GP **G**roun**d** **P**lane
GPS **G**lobal **P**ositioning **S**ystem
IC **I**ntegrated **C**ircuit
IEC **I**nternational **E**lectrotechnical **C**ommission
ISO **I**nternational **O**rganization for **S**tandardization
LNA **L**ow **N**oise **A**mplifier
MSAS **M**ulti-functional **S**atellite **A**ugmentation **S**ystem
MSL **M**oisture **S**ensitivity **L**evel
NFZ™ **N**oise-**F**ree **Z**ones **S**ystem
PCB **P**rinted **C**ircuit **B**oard
ppm **P**arts **p**er **m**illion
QZSS **Q**uasi-**Z**enith **S**atellite **S**ystem
REACH **R**egistration, **E**valuation, **A**uthorisation and Restriction of **Ch**emical substances
RF **R**adio **F**requiency
RHCP **R**ight-**H**and **C**ircular **P**olarized
RL **R**eturn **L**oss
RoHS **R**estriction of **H**azardous **S**ubstances directive
SAW **S**urface **A**coustic **W**ave
SBAS **S**atellite-**B**ased **A**ugmentation **S**ystems
SC **S**mith **C**hart
SIP **S**ystem **I**n **P**ackage
SMD **S**urface **M**ounted **D**evice
SMT **S**urface-**M**ount **T**echnology
SOC **S**ystem **O**n **C**hip
SV **S**atellite **V**ehicle
t_F **T**emperature **F**actor
TTFF **T**ime **T**o **F**irst **F**ix
VSWR **V**oltage **S**tandin**g** **W**ave **R**atio
WAAS **W**ide **A**rea **A**ugmentation **S**ystem
Z Impedance

8. ABOUT SPIDER ANTENNA FAMILY

OriginGPS' Spider Antenna family includes highly efficient active and passive antennas that have been optimized and tested to work with the Spider GNSS receiver modules.

Designed to meet the requirement of GNSS applications, the antennas offer exceptional sensitivity, high selectivity, while providing out-of-band noise immunity through sophisticated filters.

9. ABOUT ORG12-4T GNSS ANTENNA

ORG12-4T is high-efficiency antenna element - offers powerful gain levels, which provides higher sensitivity margins for positioning applications.

Designed to support space constrained applications such as smart watches, digital cameras and action cameras, ORG12-4T GNSS antenna introduces GLONASS in addition to GPS into wearable devices.

Measuring only 12mm x 12mm ORG12-4T GNSS is industry's small sized, record breaking GPS + GLONASS antenna solution.

10. ABOUT ORIGINGPS

OriginGPS is a world leading designer, manufacturer and supplier of miniature positioning modules, antenna modules and antenna solutions.

OriginGPS modules introduce unparalleled sensitivity and noise immunity by incorporating Noise Free Zone system (NFZ™) proprietary technology for faster position fix and navigation stability even under challenging satellite signal conditions.

Founded in 2006, OriginGPS is specializing in development of unique technologies that miniaturize RF modules, thereby addressing the market need for smaller wireless solutions.

11. SPECIFICATIONS

11.1. ELECTRICAL CHARACTERISTICS

Parameter	Value		Unit	Notes
Resonant Frequency (f_C)	GPS	1575 ± 2	MHz	13mm x 13mm GP
	GLONASS	1598 - 1606		
Return Loss (S_{11})	-10 (min)		dB	@f_C
Bandwidth (BW)	10 (min)		MHz	@ f(S_{11}=-9dB)
VSWR	1.5 (max)			
Impedance (Z_A)	50		Ω	
Axial Ratio (AR)	5.0 (max)		dB	
Gain @ f_C	GPS	-0.3 (max.)	dBic	13mm x 13mm GP
	GLONASS	-3.5 (max.)		
Polarization	RHCP			
Temperature Factor (t_F)	0±20		ppm/°C	-40°C to +85°C

TABLE 3 – ELECTRICAL SPECIFICATIONS

11.2. TYPICAL S_{11}

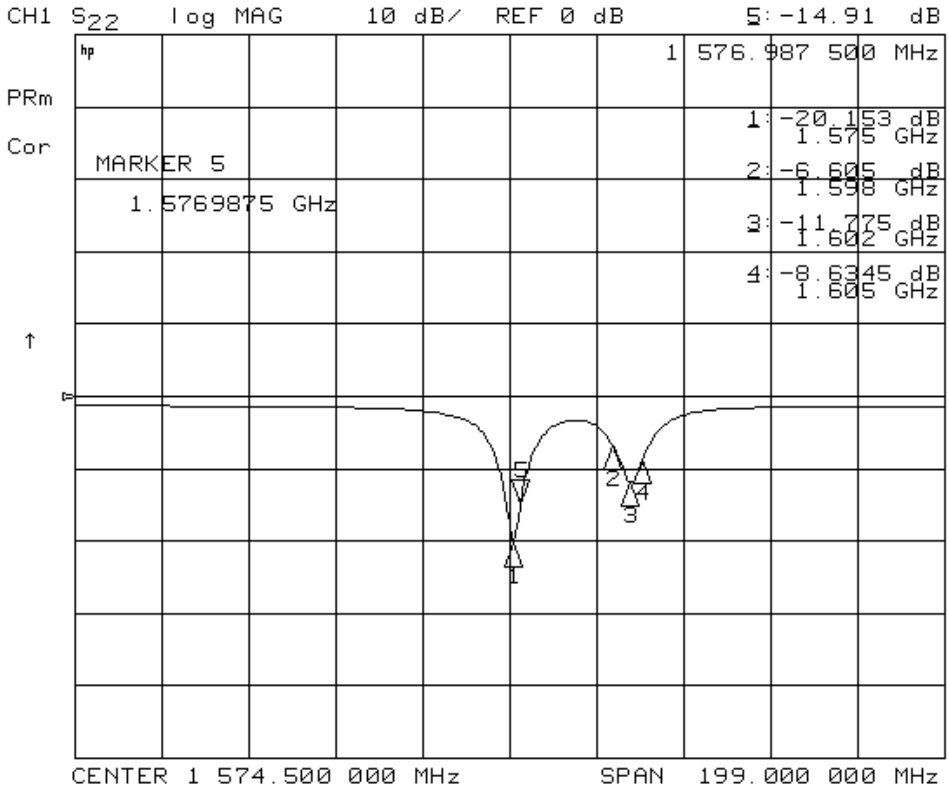

FIGURE 1 – RETURN LOSS S_{11}

Note:

- Measured on 13x13mm Ground Plane of exposed ENIG FR4 with adhesive tape.

11.3. RADIATION PATTERN

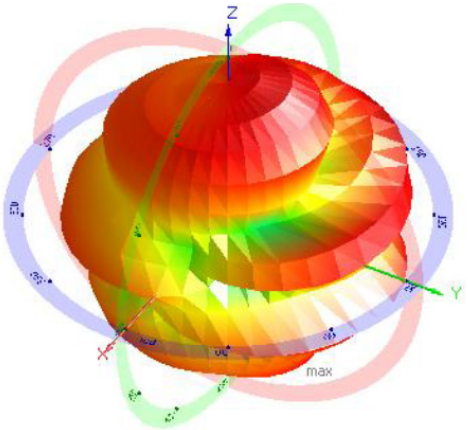

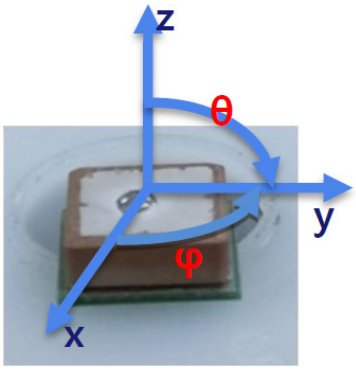

FIGURE 2 – 3D EIRP

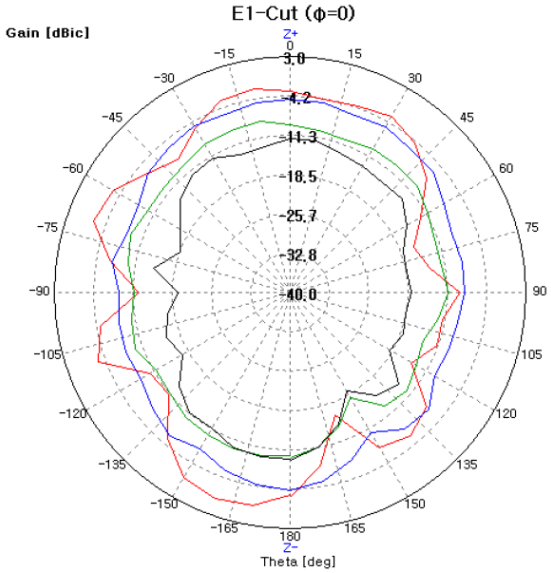

FIGURE 4 – E1-CUT

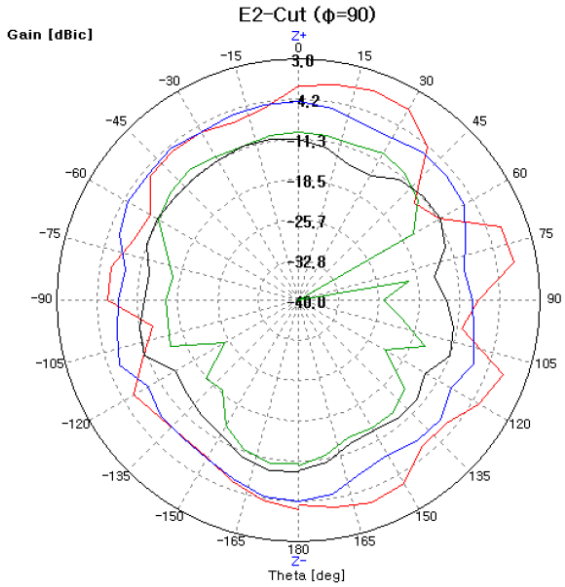

FIGURE 3 – E2-CUT

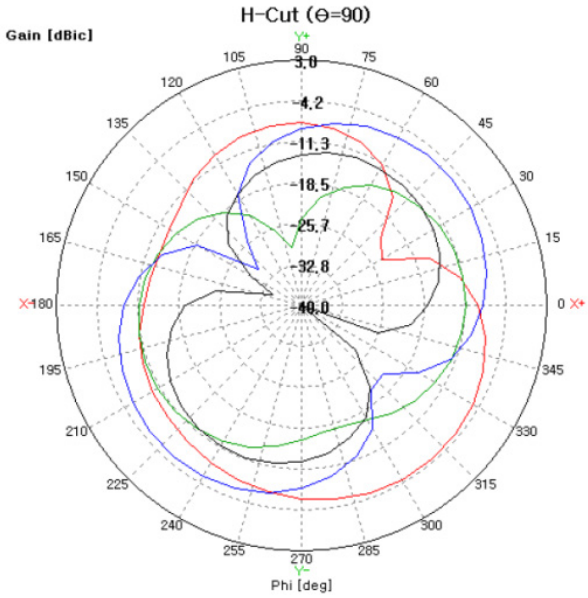

FIGURE 5 – H-CUT

Frequency	1575	1592	1602	1612

12. MECHANICAL SPECIFICATIONS

12.1. DIMENSIONS

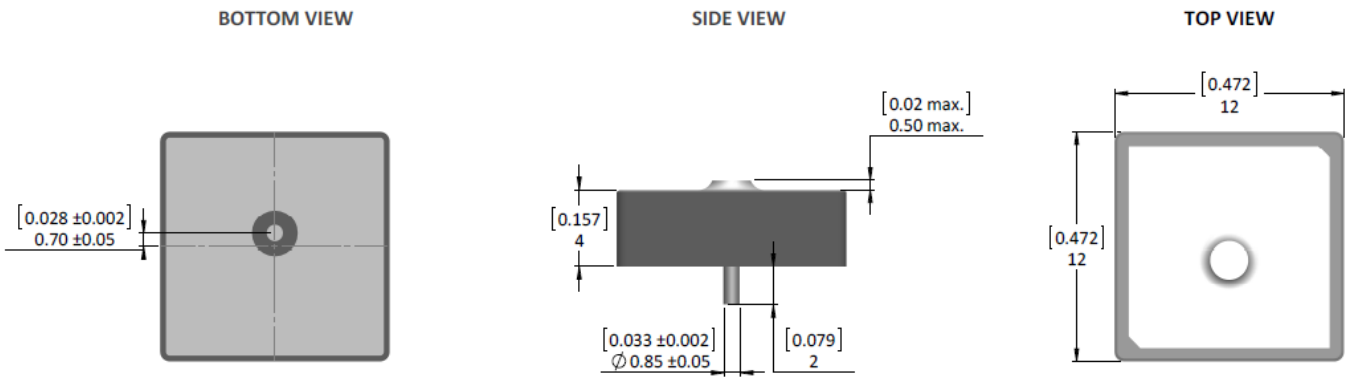

FIGURE 6 – MECHANICAL OUTLINE

Dimensions	Length	Width	Thickness	Weight	
mm	12.0 ± 0.2	12.0 ± 0.2	4.0 ± 0.2	gr	3.4
inch	0.472 ± 0.008	0.472 ± 0.008	0.157 ± 0.008	oz	0.1

TABLE 4 – MECHANICAL INFORMATION

12.2. MATERIALS

Item	Material
Electrode (Top and Bottom)	Silver
Probe	Silver Plated Brass
Probe pin solder material	Stannum
Dielectric constant	
Adhesive tape	3M™ 468MP

TABLE 5 – MATERIALS

13. HANDLING INFORMATION

13.1. ASSEMBLY

After removal of protective paper from adhesive, antenna must be manually mounted into PCB hole.

13.2. SOLDERING

Manual iron soldering (Solder Sn/Ag/Cu 96.5/3.0/0.5)
Wettability to IEC 68-2-58: ≥ 75% (after aging)
Note:

- Soldering must comply with recommended conditions to prevent degradation of antenna performance.

13.3. STORAGE

Typical floor life should not exceed 6 months after package has been opened.
Avoid intentional shock or drop to prevent cracking of antenna.
Note:

- Bulk antennas older than 6 months should be tested for solderability before use.

14. COMPLIANCE

Antennas are designed and being manufactured and handled to comply with and according to Pb-Free/RoHS Directive 2002/95/EC on the restriction of the use of certain hazardous substances in electrical and electronic equipment.

Antennas are manufactured in ISO 9001:2000 accredited facilities.

15. RELIABILITY

Parameter	Description	Pass Criteria
Drop Test	1. Place antenna on set 2. 1.5m height 3. Drop 5 times	1. No visible damage 2. S_{11} satisfy ($\Delta f_C < 0.2\%$)
Vibration Test	5 – 55 – 5 Hz, 1 Octave/min Amp.= 1.5mm, acceleration=2gr Crossover freq.= 18Hz, Hold time= 2hr.	1. No visible damage 2. S_{11} satisfy ($\Delta f_C < 0.2\%$)
Humidity	60°C, 95% RH, 96hr.	1. No visible damage 2. S_{11} satisfy ($\Delta f_C < 0.2\%$)
Thermal Shock	1. +80°C (30min.) → 5 min → -40°C (30min.) 2. 10 cycles	1. No visible damage 2. S_{11} satisfy ($\Delta f_C < 0.2\%$)
High Temperature Resistance	+90°C, 96hr.	1. No visible damage 2. S_{11} satisfy ($\Delta f_C < 0.2\%$)
Low Temperature Resistance	- 40°C, 96hr.	1. No visible damage 2. S_{11} satisfy ($\Delta f_C < 0.2\%$)
Adhesion Strength of Soldering	Use of pull-push gauge	Spec (min. 5kgf)

TABLE 6 – RELIABILITY DATA

Notes:

- Sample must satisfy the requirement after 24 hours of test.
- Based on IEC climatic category (IEC68-1) -40°C / +85°C / 56hr.

16. PACKAGING AND DELIVERY

16.1. APPEARANCE

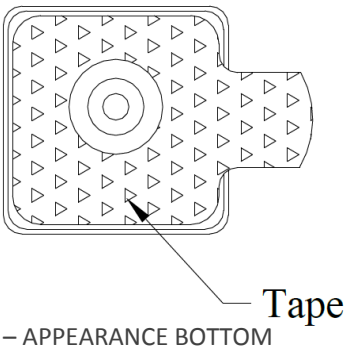

FIGURE 8 – APPEARANCE BOTTOM

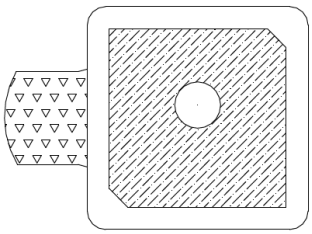

FIGURE 7 – APPEARANCE TOP

Scratches or cuts on silver surface top side of antenna are possible as typical results of factory trimming of resonant frequency and polarization.

Mild chipping of ceramic boundaries is acceptable.

Electrode metallization is unprotected silver and may tarnish after opening of vacuum package. Elevated temperature and humidity will accelerate this process.

16.2. MARKING

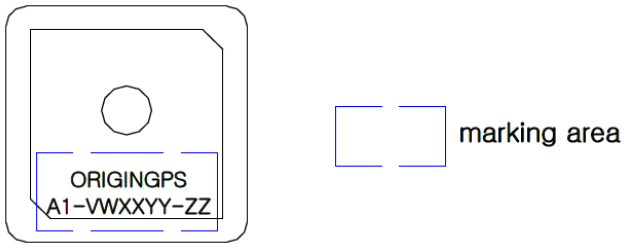

FIGURE 9 – MARKING

- V : Line section
- W : Year
- XX : Month
- YY : Day
- ZZ : Serial number of daily batch

TABLE 7 – MARKING

16.3. PACKAGING

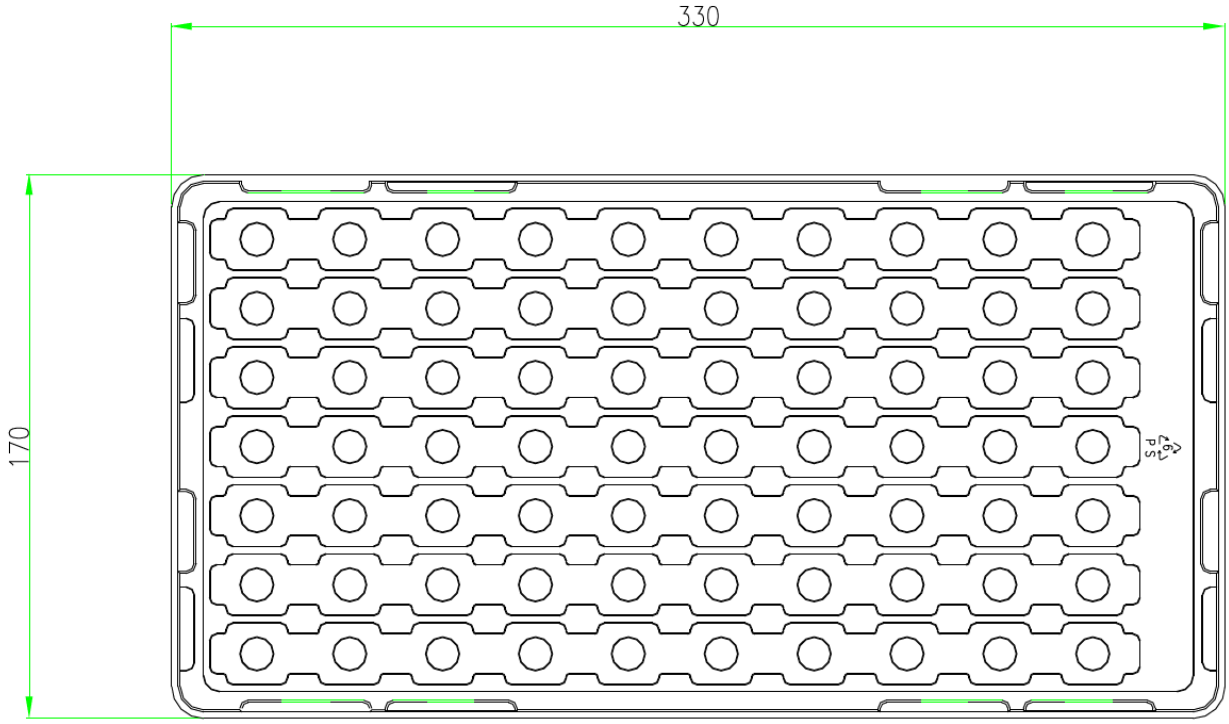

FIGURE 10 – PACKAGING

Dimensions	Length	Width	Quantity
mm	330	170	70
inch	0.472 ± 0.008	0.472 ± 0.008	

TABLE 8 – PACKAGING DIMENSIONS

17. ORDERING INFORMATION

O	R	G	1	2	-	4	T	-	G	N	S	S

TABLE 9 – ORDERING OPTIONS